S 88 K..BBT

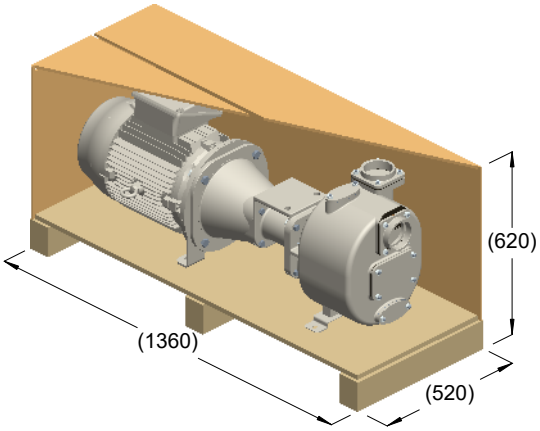

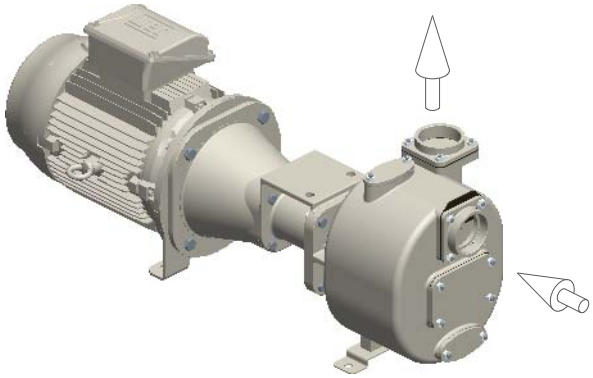

kg = 239
m³ = 0.44

kg = 226

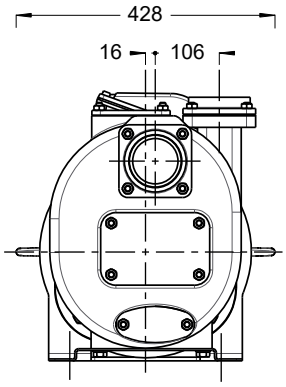

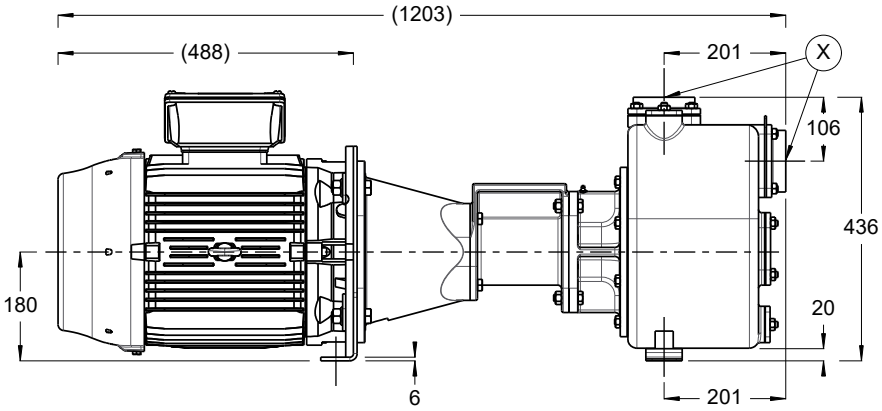

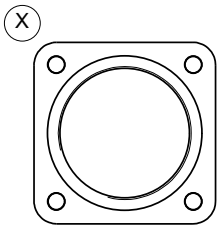
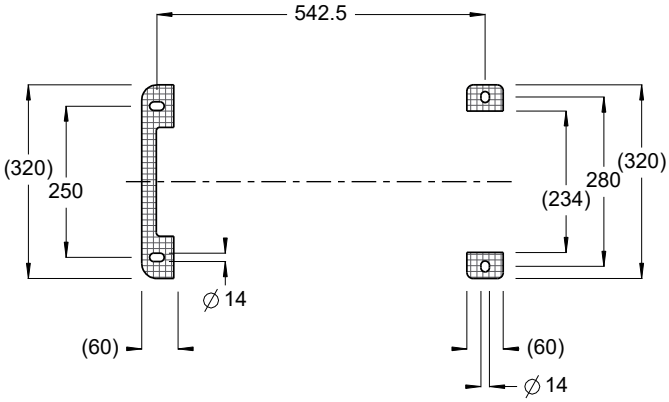
R3" BSP