Maßbild - Dimensions - Dimensioni

S 83...T

S-753281

10/03/10

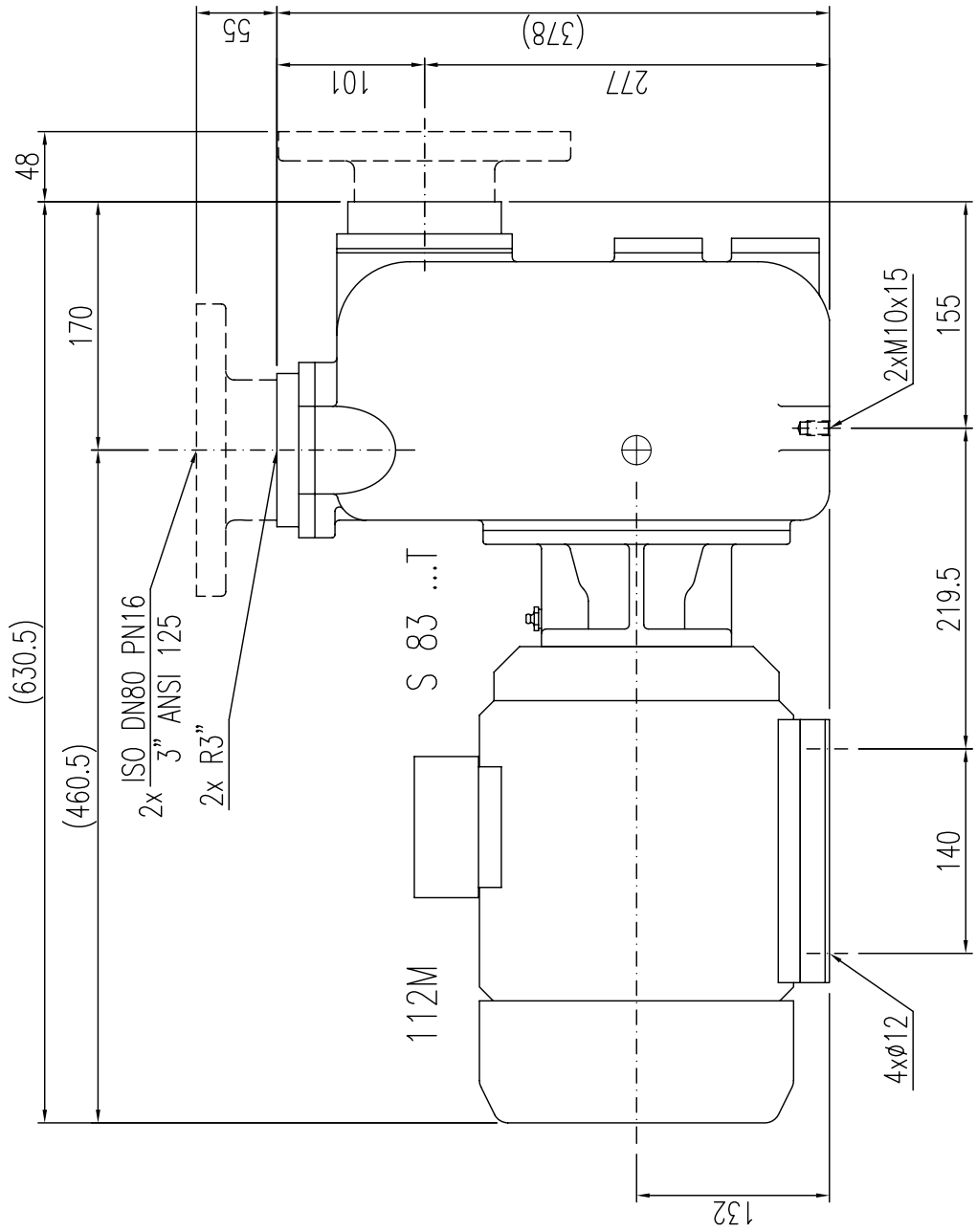

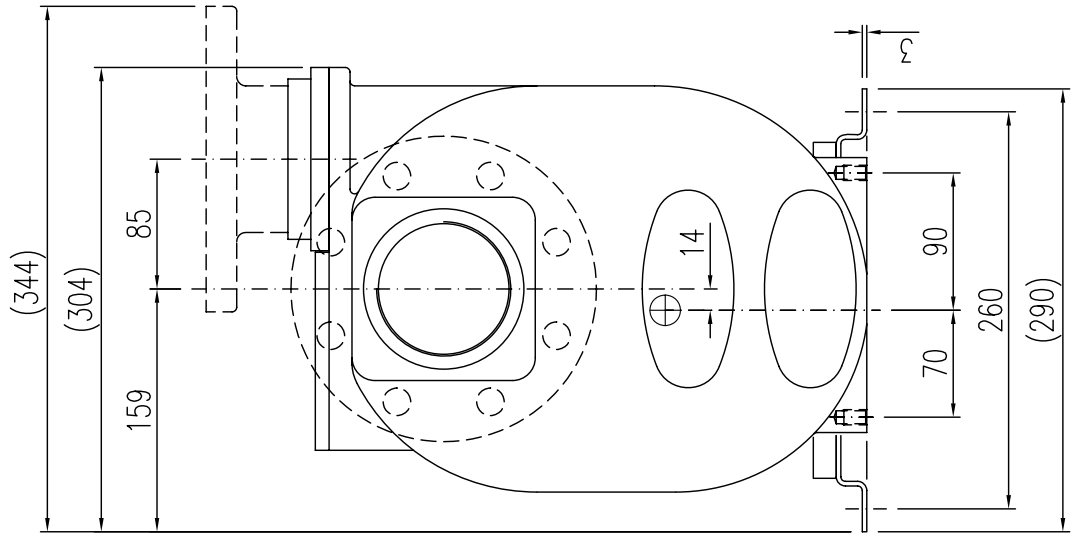

GERMANY • Tel. +49 89 9048660 • Fax +49 89 9043447 • germany@victorpumps.com
ITALY • Tel. +39 0498961266 • Fax +39 0498961255 • italy@victorpumps.com

VICTOR PUMPS